PULP AND PAPER

Vietnam September 2015



AGENDA

- Introduction to the handbook

- Introduction to the training program
  - Day one: Audit
  - Day two: Production
  - **Day three: Utility**
  - Day four: Site visit

INTRODUCTION (I)

Energy efficiency in utility systems

5.1 Electrical Efficiency
- 5.1.1 Energy efficiency in compressed air system
- 5.1.2 Energy efficiency in motor, pumps, fan and blowers
- 5.1.3 Vacuum system
- 5.1.4 Energy efficiency in lighting
- 5.1.5 Energy efficiency in transformers

5.2 Thermal Efficiency
- 5.2.1 Energy efficiency in supply systems
- 5.2.2 Energy efficiency in distribution systems
- 5.2.3 Waste heat

5.3 Combined heat and power

5.4 Heat pumps

INTRODUCTION (IV)

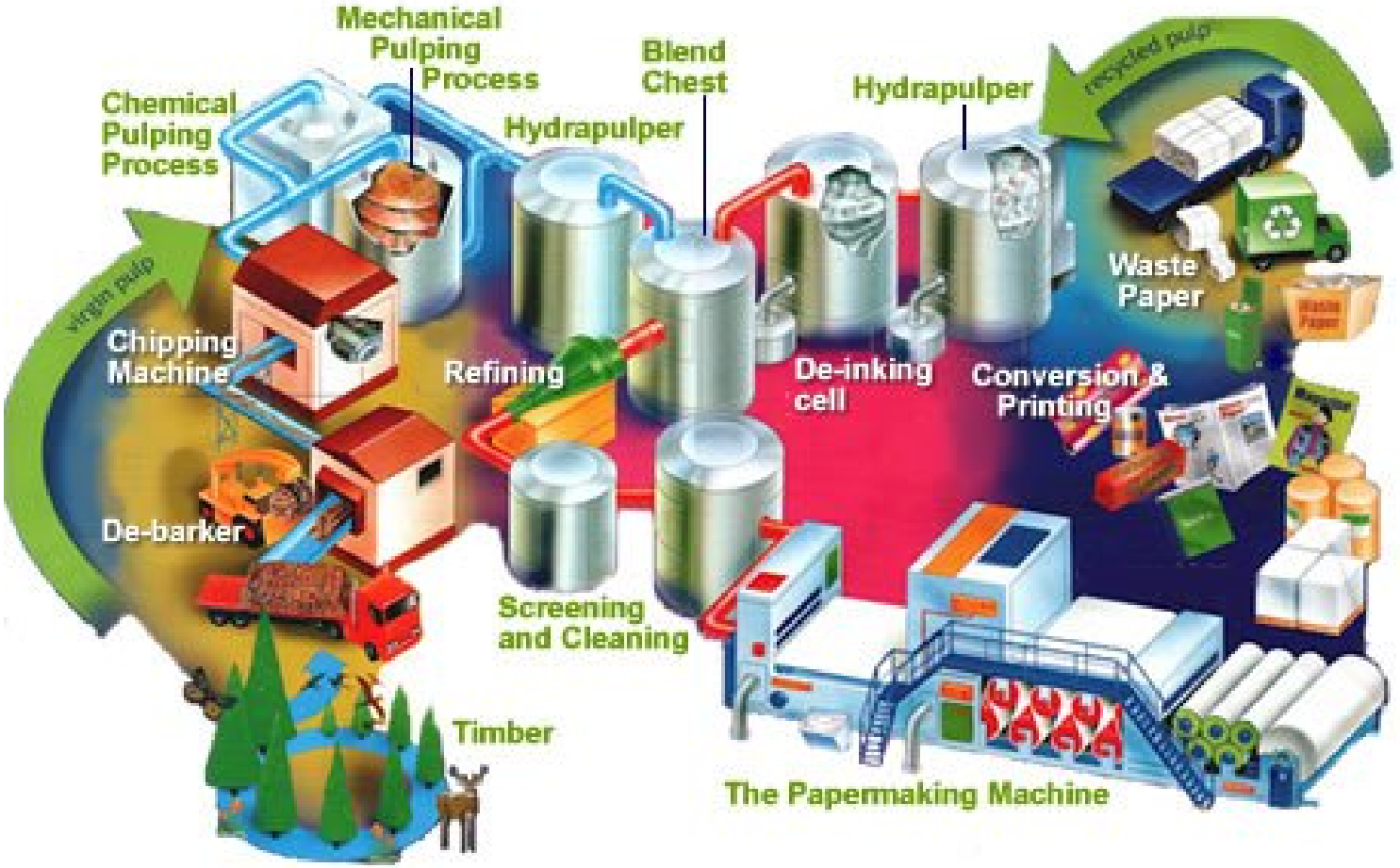

What is crucial ?

What is the energy service?

Where are the losses?

How can losses be identified?

How can losses be reduces?

What can cause losses?

In which form can losses ocure?

- **Material**
- **Water**
- **Energy**

ELECTRICAL EFFICIENCY

5.1 Electrical Efficiency

- 5.1.1 Energy efficiency in compressed air system
- 5.1.2 Energy efficiency in motor, pumps, fan and blowers
- 5.1.3 Vacuum system
- 5.1.4 Energy efficiency in lighting
- 5.1.5 Energy efficiency in transformers

Energy efficiency measures in compressed air systems

Reduction of pressure level:

What is the actual needed operating pressure?

- Find the needed pressure levels at end users. Be aware of internal reductions in the users.
- Compare with the highest demand with the set point.
- No more than 1.3 bars in difference
- No buffer in pressure!!

Energy savings: 6 – 8 %
per bar reduction.

Maintenance and leaks will also be reduced.

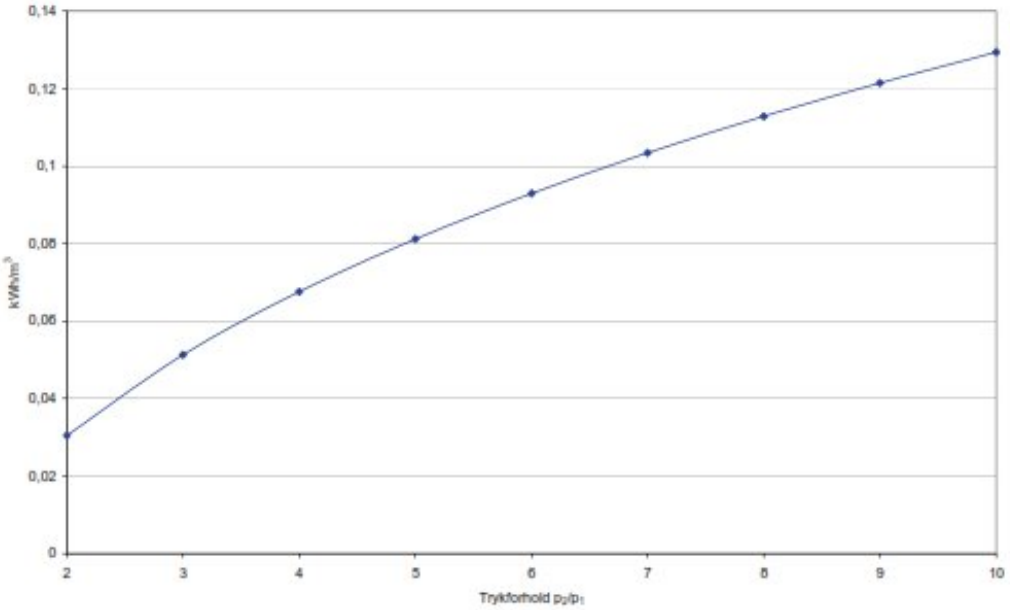

Energy efficiency measures in compressed air systems

Sectioning of distribution systems:

In general it means splitting the system and/or creating “dead ends”. Can be used two the following

- Different pressure levels
- Different operating hours
- Creating higher security of operation at main components
- Better use of compressors
- Better fit of load with capacity

Energy savings: Project specific calculations is needed

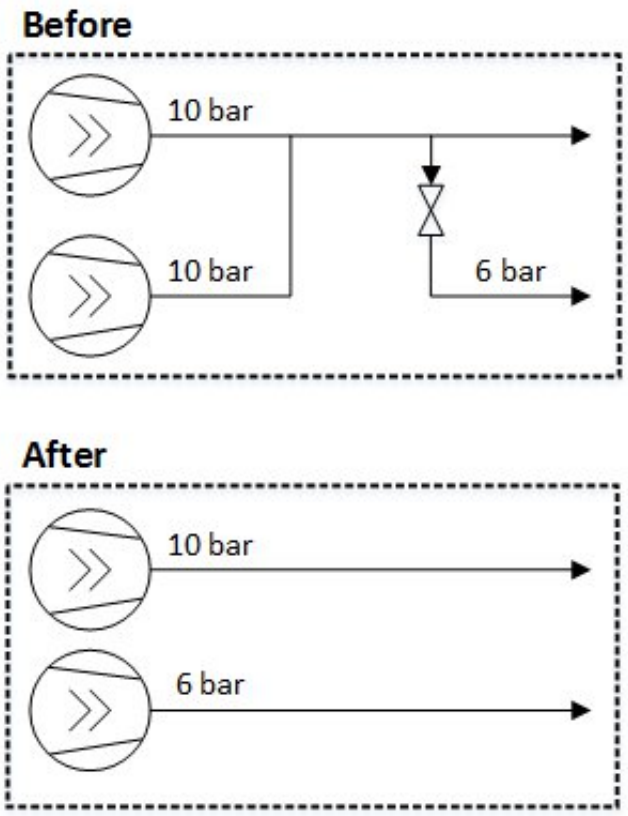

Energy efficiency measures in compressed air systems

Heat recovery:

Heat can either be transferred to air or water

- The largest task is to find an appropriate heat sink.
- The heat sink is preferred to be large and stable.
- Oil or air cooled compressor system

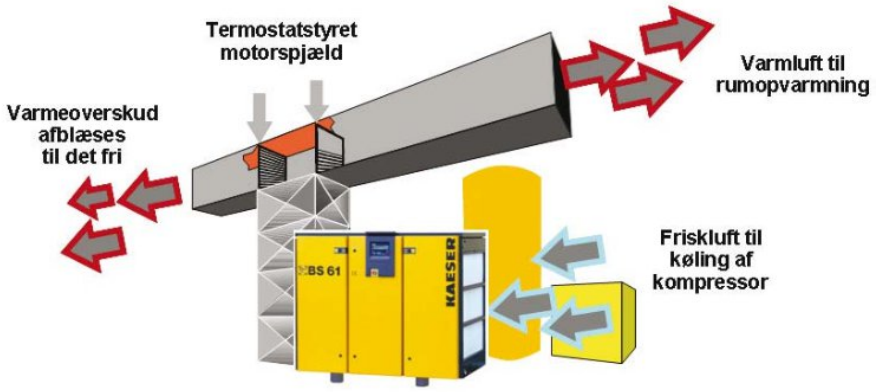

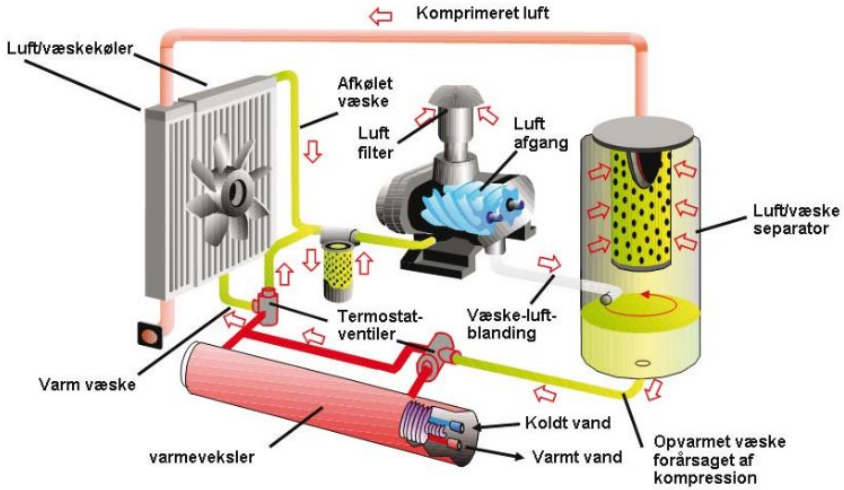

Energy saving: 80-85% for air

30-70% for oil

Energy efficiency measures in compressed air systems

VSD and/or control of compressors

The importance of compressor regulation/control is proportional to variation in load patterns.

- In a multiple compressor setup, it is only necessary with 1 VSD
- Some compressors opperate based load, and one is regulated
- Avoid to many start/stops.
- Expert assisstence is required
- Compressors has optimum operation close to 100% load.

Energy saving: 3-10%

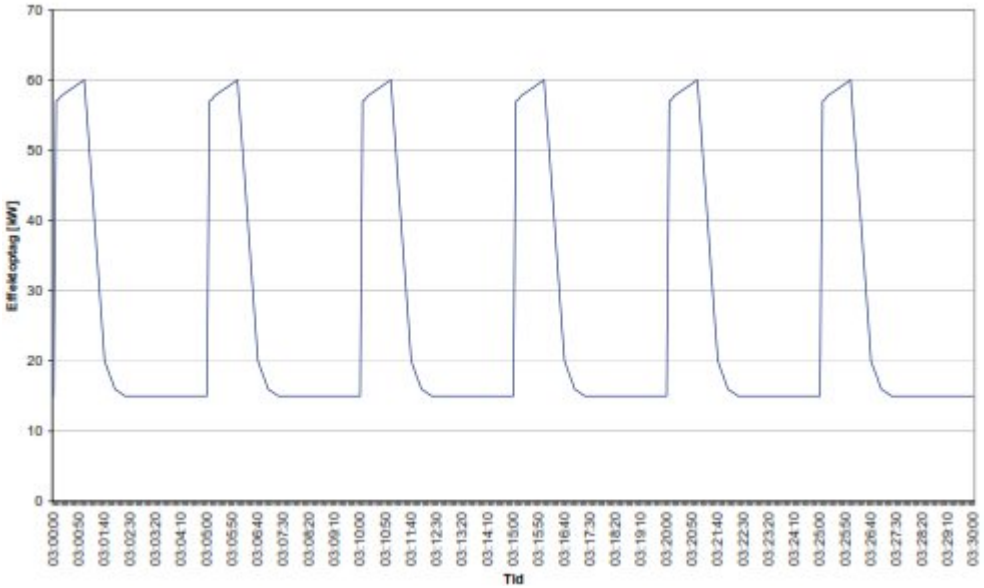

Energy efficiency measures in compressed air systems

Other suggestions for CAS

- Check size of pipe system
- Improve water and air removal
- Reduce temperature of compressor air inlet

ASSIGNMENT NO. 1

Optimization of a CAS system

Discuss in groups the challenges with regards to energy optimization in related to:

- Pressure level
- Sectioning
- Heat recovery
- Standby losses
- Load sharing
- Etc.

Energy efficiency measures in motor, pumps, fan and blowers

Frequency converters:

This technology can be used in almost every equipment that has a motor.

- The main point is to find equipment that operates at a higher level than the process needs.
- Relevant equipment can be pumps, agitator, rolls, compressors, fans, etc.
- Calculations of energy saving potential will vary from project to project.
  - The affinity laws applies for pumps and fans

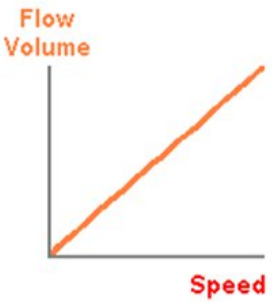

$$\frac{Flow_1}{Flow_2} = \frac{RPM_1}{RPM_2}$$

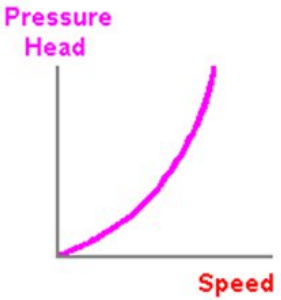

$$\frac{Head_1}{Head_2} = \left(\frac{RPM_1}{RPM_2}\right)^2$$

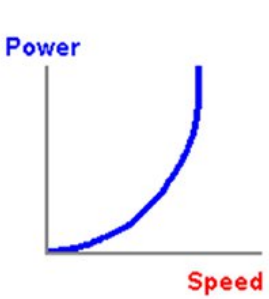

$$\frac{Power_1}{Power_2} = \left(\frac{RPM_1}{RPM_2}\right)^3$$

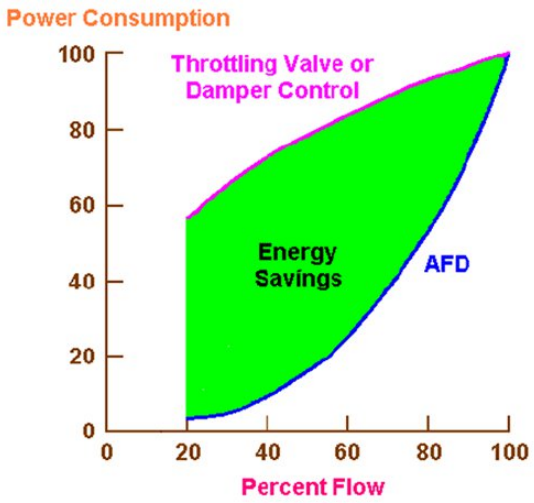

Energy efficiency measures in motor, pumps, fan and blowers

Class of motors

Energy efficiency covers the amount of consumed power that ends up at the shaft.

- IE1 is the lowest class, and IE4 is the best class at the moment. New classes can be introduced over time.
- This case is most relevant when there is invested in new equipment.
  - Only focus on the extra investment cost when the ROI is calculated.
- The subject can be covered by purchase policy.

Energy saving: Depends on class and size of motor.

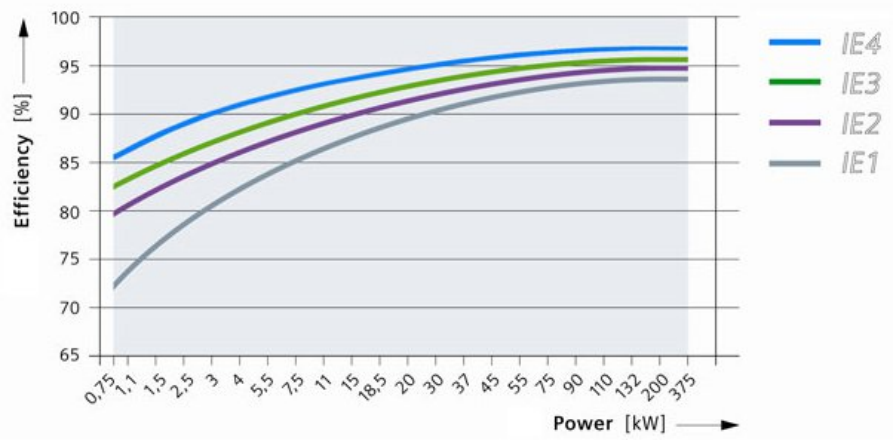

Energy efficiency measures in motor, pumps, fan and blowers

Differential pressure over pumps and blowers

Is all pumps and blowers operate at their optimum?

- To ensure production, the differential pressure is usually higher than the process requires. If this can be lowered, there will be energy savings without any interruptions of the process.
- Calculations is made as previous slide.

Energy savings: 10-20%

Energy efficiency measures in motor, pumps, fan and blowers

Splitting into multiple units

Pumps should operate close 100% load when possible.

- Large pumps can be split into multiple smaller units, without effecting the energy efficiency.
- In this way, the pump operation can fit different load profiles.
- Maintenance and backup equipment is easy and cheap.

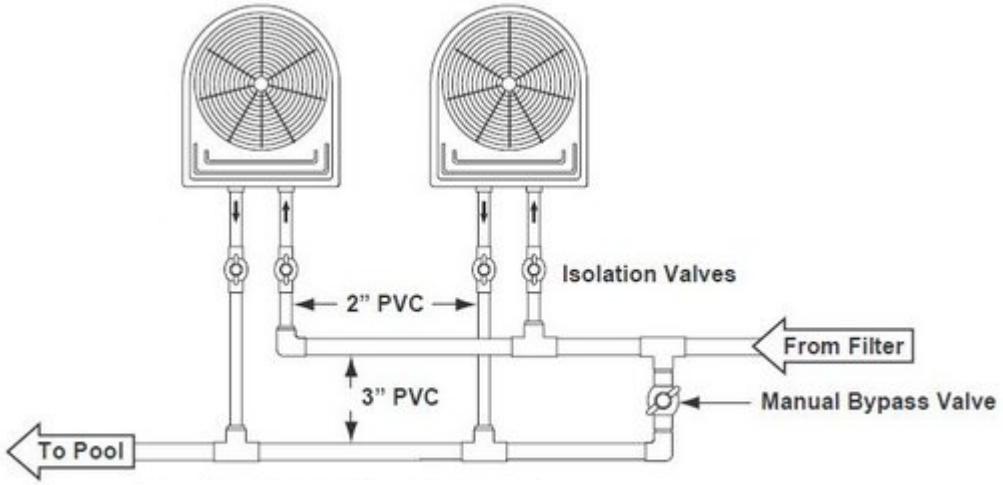

Energy efficiency measures in motor, pumps, fan and blowers (i)

Change of drive belts

Belts can be in the spectra from very good to very bad. Make sure to be good.

- Belt drives are old school and should be avoided at new investments.
- At many situations they are irreplaceable, and thereby accepted.
- Ensure the belt drives are proper maintained!!
- If changes are made, install high efficiency belts such's as cogged or synchronous belts.

Energy savings: Normally 10%.

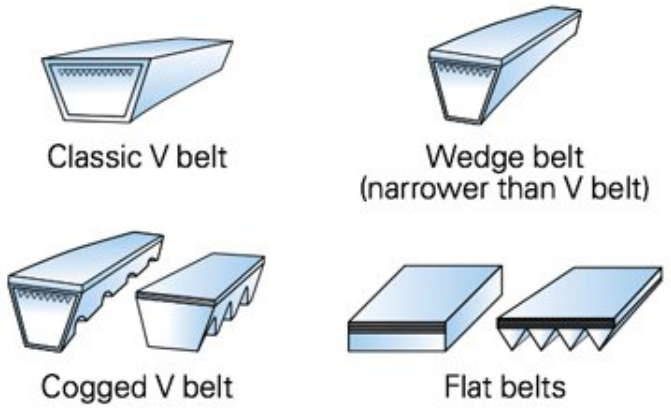

Energy efficiency measures in motor, pumps, fan and blowers (II)

Change of drive belts

Example of flat belts on cooling compressor.



ASSIGNMENT NO. 2

Installation of VSD on pump

A pump is designed to deliver 24.8 m^3/h and the motor has a effect of 5 kW.

The actual needed flow is 21.0 m^3/h.

What is the energy saving if a VSD is installed and the operating hours are:

- A: 2000 hr/year?
- B: 5500 hr/year?

Energy efficiency measures in vacuum systems

Selection of vacuum technology

All vacuum pumps should be rotary pumps sealed with a ring of water, unless there are specific reasons not to chose this technology.

- In vacuum systems, water will be sucked out of the paper lane. The same water is used to cool the pumps.
- To ensure energy and water efficiency, this water must be led back into the process. This will lower the heat consumption on the paper machine

Energy saving: Normally 50%

- Discuss the consequences through the entire facility of this measure?

ENERGY EFFICIENCY MEASURES IN LIGHTNING

- Light is present in all rooms from production to freezers and offices, and can consume more energy than needed.
- Lighting system can easily be changed to use less energy and save money..
- Another point is that all the energy used for lighting will end as heat added to the room, adding to the cooling load.
- There are many ways to reduce the electricity used for lightning, which are listed below:
  - Replace fluorescent tubes from T8 to T5.
  - Replace light system with LED light.
  - Install censors and zones in the light system.
  - Install day light controll
  - Install sky light to increase natural light.





The energy saving will normally be between 15 to 60 %.

ASSIGNMENT NO. 3

Lightning

- What will be the savings if 100 pcs. 100 W are replaced 25 W lamps, with yearly operation hours of 2.000?

- How can it be improved further and what will be the effect?

ENERGY EFFICIENCY MEASURES IN TRANSFORMERS

- In the transformer from high to low voltage there is a loss of energy, especially in the old ones. If a new transformer in installed, the energy saving can be as high as 6 %.
- It is important to notice that this energy saving will be on all electrical energy used by the facility, without affecting the user at all.

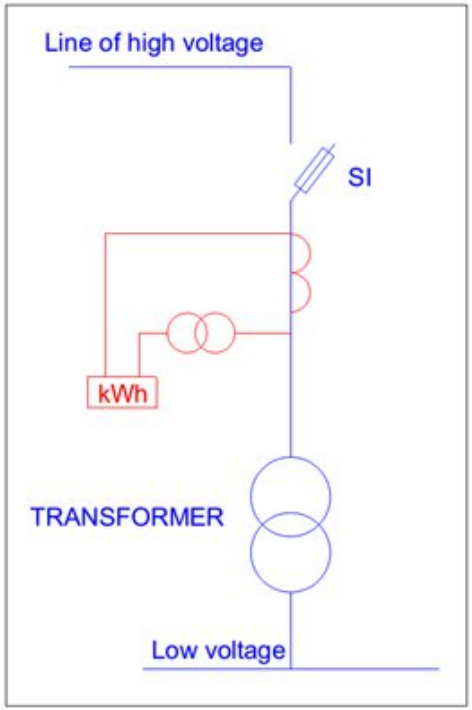

THERMAL EFFICIENCY

- The thermal energy used in the paper and pulp industry, mainly originates from a central boiler producing steam. The boiler can be fired with many different kinds of fuels, but the heating medium is always steam.

- If the facility is energy efficient, heat can also originate from waste heat sources contributing to lower the fuel consumption. But the main part of the thermal energy will still originate from burning of fuels.

ENERGY EFFICIENCY MEASURES IN SUPPLY SYSTEMS

Blow down, heat recovery

- When a boiler is operating, it is necessary to have a blow down (bleeding of water in the boiler) to keep the level of slats on an acceptable level.
- Water from the blow down will have the same temperature as water in the boiler, and if it is led to the sewer, it is an energy loss.
- The idea is to use the blow down water to preheat incoming water, before it is led to the sewer. In this way, heat will be recovered and the fuel consumption will be lowered.

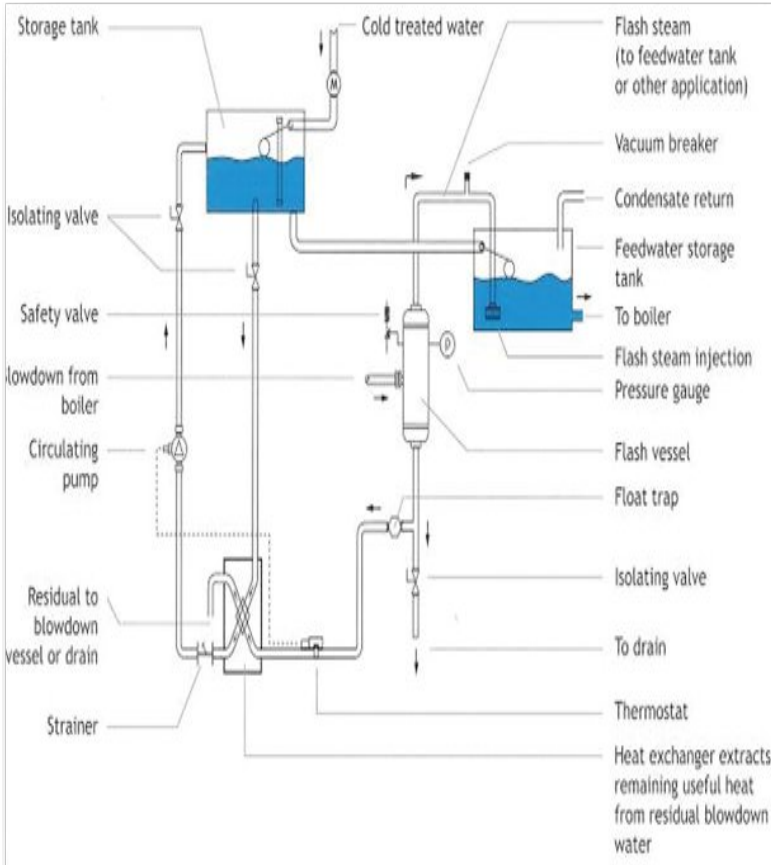

ENERGY EFFICIENCY MEASURES IN SUPPLY SYSTEMS

Blow down, atomization

- Blow down is normally done manually based on measurements of the conductivity. Because of the discontinuity in this matter, the conductivity must be kept very low to ensure the maximum is never reached. Another solution is to install an automatic system that continually measures the conductivity and controls the blow down valve. In this way the conductivity can be kept at a higher level, lowering the stream of blow down water.
- The energy saving potential for this measure is highly dependent on the quality of the water treatment system for makeup water. If the water treatment is bad, there is a large blow downstream and vice versa. But general it is normal to lower the fuel consumption with 1 %

ENERGY EFFICIENCY MEASURES IN SUPPLY SYSTEMS

Economizers

- When flue gas levels the boiler, the temperature will still be very high and contain a lot of energy. If the flue gas is led directly to the stack, there will be a large and costly energy loss. A well-known solution is to install one ore economizers that lower the flue gas temperature and utilise the heat in it. An economizer is in principle a large heat exchanger.

- The first option is to preheat water in the economizer, it can cold makeup water or return condensate from the production. After this, the flue gas can be cooled even more be preheating of combustion air to the boiler. Both solutions will lead energy back into the boiler system, lowering the overall fuel consumption

ENERGY EFFICIENCY MEASURES IN SUPPLY SYSTEMS

Economizers

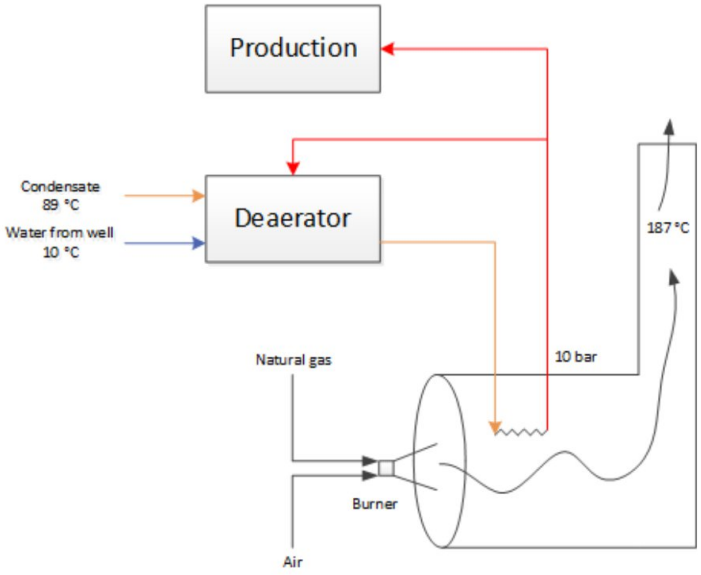

(a) – Before

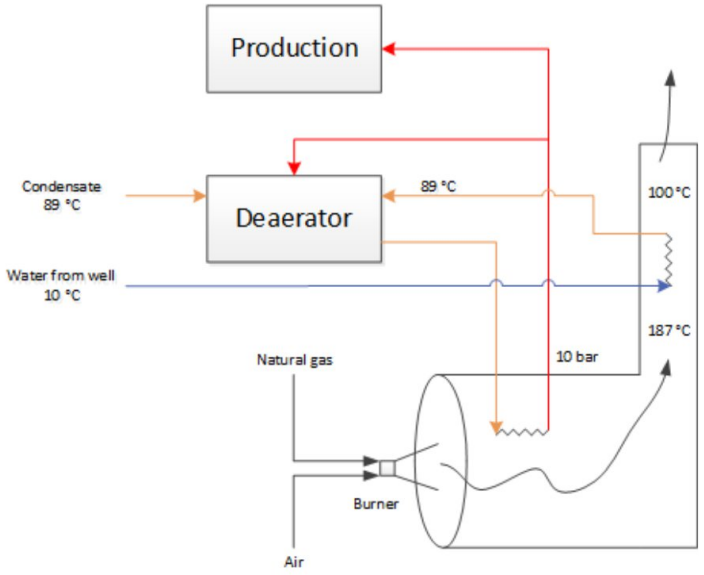

(b) – After

ENERGY EFFICIENCY MEASURES IN SUPPLY SYSTEMS

Burner/combustion control

- Regulation and control of a boiler is importance for the energy efficiency. A boiler will always have losses and the load will vary, and sometimes rapidly. The task is to minimize the loss and have the most optimized control and regulation of the burner.
- A main parameter is the excess oxygen in the combustion, which is measured in the stack. If the excess is low, there will by a low loss of unburned fuels. If the excess is high, there will by a high loss of heat in the stack. This gives energy and economical optimum to operate the boiler at, which also varies with the load on the burner. The general project is to have the air to the burner regulated by a measurement of the excess oxygen.

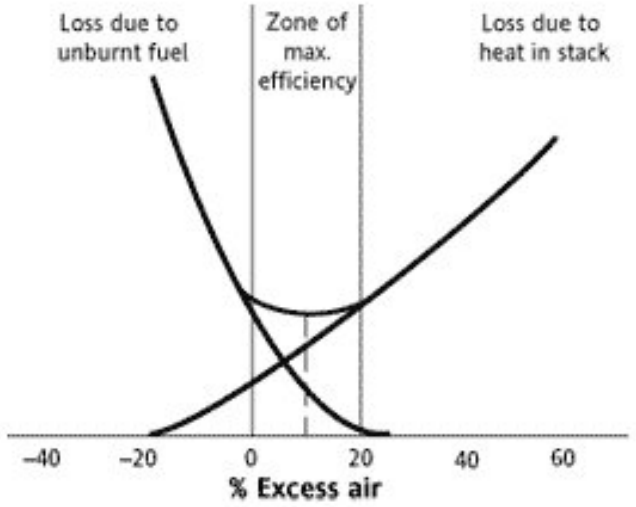

ENERGY EFFICIENCY MEASURES IN SUPPLY SYSTEMS

Deareator

- As part of a water treatment for makeup water for the boiler, it passes through a deaerator that removes air from it. Normally the condensate stream also passes through the deaerator. The deaerator is often driven by steam because a high temperature is needed. From the unit there is rejected steam with a very high concentration of air, and this I normally led to the surroundings.
- The idea is to reuse this heat with an air to liquid heat exchanger and preheat the ingoing water for the deaerator. Steam led to the surroundings is otherwise an energy loss.

- Note: temperature control of the deareator is also a important factor.

ENERGY EFFICIENCY MEASURES IN SUPPLY SYSTEMS

Insulation

- All equipment that has a temperature different from the ambient should be insulated. This accounts especially for very hot equipment like boilers, steam pipes and condensate system. Even if there is installed insulation, it can sometimes be improved.
- Pipes, boiler and tanks are easy to insulate, but valves and joints can also be insulated with removable carpets. This makes it easy to remove them for inspection without the need for breaking the insulation.





ASSIGNMENT NO. 4

Boiler

- List different ways of improving a boiler system.

- A boiler with no efficiency equipment installed, a efficiency of 75 % and a condensate return temperature of 80 C.
  - How can that boiler be improved?
  - What will be the efficiency?
  - Can the efficiency be higher then 100%?

ENERGY EFFICIENCY MEASURES IN DISTRIBUTION SYSTEMS

Steam traps

- In a steam distribution system there are installed steam traps, which purpose is to remove water from the steam pipes. There will almost always be generated some water because energy loss to the surroundings. If there are water in the steam pipes the frictional resistance will increase rapidly and in worst case some users will only receive condensate and no steam.
- All steam traps needs regular maintenance to function, otherwise malfunction can arise. In some situations no water is led out by the steam trap. In other cases the steam trap will develop leaks and lead steam to the surroundings or the condensate system. In both cases there is an energy loss.

ENERGY EFFICIENCY MEASURES IN DISTRIBUTION SYSTEMS

Steam traps

- Calculation

$$m = 0.002905 * E * d^2 * \sqrt{\frac{DP}{v_g}}$$

$$E = \frac{1}{\sqrt{1 - b^4}} \qquad b = \frac{d}{D}$$



Where:

- ΔP is the system pressyre mm H20
- v_g is specific volume of steam m^3/kg
- d is the opening of the steam trap
- D is pipe diametre
- 1 bar=10.197 mH2O

Correction factor

	Open end system	Condensate system
Small leakage	1.00	0.50
Medium leakage	0.50	0,25
Large leakage	0.10	0.05
Full blow through	1.20	0.60

ENERGY EFFICIENCY MEASURES IN DISTRIBUTION SYSTEMS

Evaluation of pressure level

- The pressure level of the steam system reflects the temperature level as well with high pressure equal to high temperature. With a high pressure, the heat losses are higher in the entire system and also in the stack. The stack loss is especially important when no, or a small, economizer is installed.

- The idea is to evaluated the needed pressure and optimize the system to the lowest pressure possible.

ENERGY EFFICIENCY MEASURES IN DISTRIBUTION SYSTEMS

Distributing systems

- In the distribution of steam and hot water and the recycling of condensate, there can be a possibility to save energy. All pipes containing fluids that are higher than the ambient temperature should be isolated.
- The pipe system should contain of the shortest possible span in the highest dimensions, meaning that a large main pipe often is better than two smaller pipes. If a facility has grown since the original design, there can easily have been made new pipe systems from the boiler and out because of lack in capacity in the existing ones. An idea could be to rebuild the entire pipe system. This will lower heat and pressure loses

ASSIGNMENT NO. 5

Losses in a 100 m pipe

- U_{old}=5 W/m^{2}K
- A=2πr^{2}L
- 8760 hours/year

Q=UAΔT

- Increased insulation
- U_{new}=2W/m^{2}K

Other ways of reducing the distribuation losses?

ENERGY EFFICIENCY MEASURES IN WASTE HEAT

- A general focus on waste heat is one of the most important things to lower the overall energy consumption. After the energy consumption has been brought to a minimum, the next step is to look at the inevitable waste heat. The general idea is to find one or more users of the waste heat instead of leading it to the surroundings. By this, primary fuel will be saved which should generate the economic potential that is needed to optimize the existing systems.
- The following things are important when utilizing waste heat:
  - If possible, use the energy at the equipment that is producing it. Otherwise, use it close to the source.
  - Use the waste heat at the highest possible temperature, meaning exploit the exergy. E.g. if a stream of waste heat is 90 ºC, use it to heat water up to 80 ºC instead of preheating of fresh water.
  - Make sure that there is a high simultaneity of the heat source and sink.
- At a paper machine it almost always possible to heat up the backwater with a couple of degrees, which will increase the mechanical drainage and lower the energy consumption for drying.
- But in the area of waste heat, there are many different possible sources and sinks. A lot of these are described earlier, and will not be further discussed heir.
- When the economy is calculated, it is important to know fuel prices and the overall efficiency of the thermal energy system.

ENERGY EFFICIENCY MEASURES IN COMBINED HEAT AND POWER

The general efficiency of producing electricity is normally approximately 40 %, and the rest of the energy is lost as heat thru the stack. In a combined heat and power (CHP) system, the idea is to utilize the heat after the generation of electricity. In this way, the overall consumption of fuel will go down at the production site of the energy. This explained in the figures below.

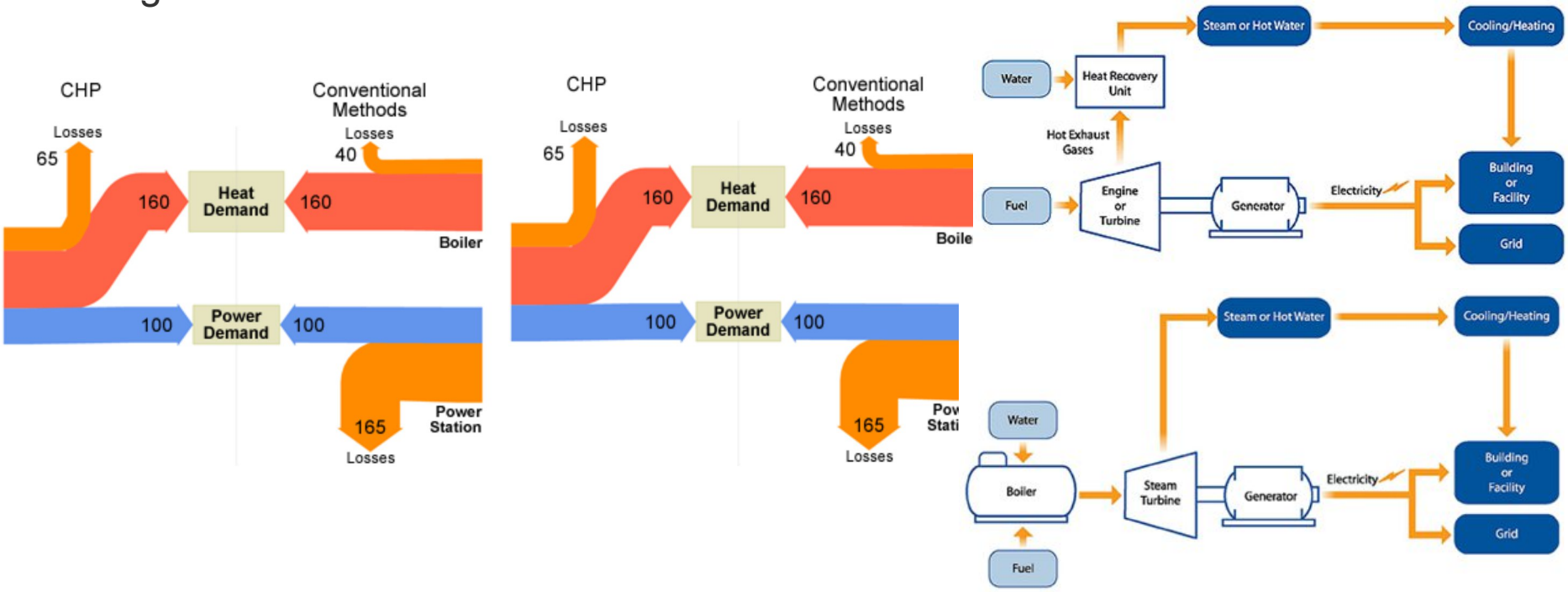

HEAT PUMPS

- A heat pump is a unit that moves thermal energy from one media to another and in the same time increases the temperature. It is normally driven by electricity, but can be driven by other sources as well.
- The working principal in a heat pump is the same as in cooling system. The only difference is that we utilize the heat produced instead of the cooling.
- The effectiveness of a heat pump is indicated by its COP (Coefficient Of Performance), which is a number that is always greater than 1. The number indicates how much heat is generated from one unit of electricity. E.g. if the COP is 5, there are generated 5 units of heat with the use of 1 unit of electricity.
- A heat pump solution can mainly produce hot water and sometimes hot air, but it cannot produce steam. So if a heat pump should be installed on a paper mill, it is important to find a user that do not need steam as an energy source.
- To install a heat pump it is important to find both a heat source and sink. They should be synchronised when operating, for the system to work.

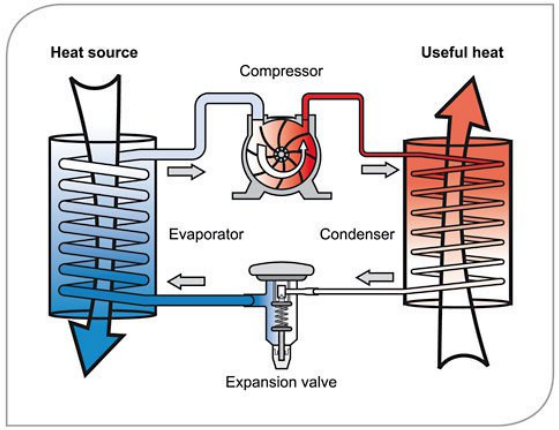

ASSIGNMENT NO. 6

Heat pump

- Why can the coefficient of performance not be higher than 1 (ideal)?
- What is the temperature limit?
- Can the heat pump be a combined cooling and heat system?

FRIDOLIN MÜLLER HOLM

Chief Project Manager,
Master of Science in Engineering

Mobile: + 45 31 75 17 14
fmh@viegandmaagoe.dk